Kit #9035

Kawasaki® Ninja®ZX-10R
2004 - 2008 Models

Arnott™
Motorcycle Air Suspension

"Engineered to Ride, Built to Last"

PARTS LIST	PART NUMBER	QUANTITY
REAR AIR SUSPENSION SHOCK	21-2812	1
COMPRESSOR ASSEMBLY	21-2969	1
UNIVERSAL PUMP BRACKET	14-3013	1
FUSED WIRE HARNESS	21-2698	1
RELAY ASSEMBLY	21-3110	1
DISTRIBUTION VALVE BLOCK	21-3053	1
SPEED REDUCING MUFFLER	29-2710	1
MANIFOLD BRACKET W/FASTENERS	14-2849	1
TOGGLE SWITCH	20-2592	1
SHOCK BUSHINGS	14-2401	2
4mm VOSS® AIR FITTINGS	29-2618	3
¼" NYLON TUBING	29-2627	6-FT
4mm NYLON TUBING	29-2625	6-FT
VELCRO®	29-3020	6″
HARNESS CABLE TIES	29-2617	8
SPLIT LOOM	29-3000	3-FT

Copyright © 2008, Arnott Inc.

REVISION #04 01/02/2009

Kit #9035
Kawasaki® Ninja®ZX-10R
2004 - 2008 Models

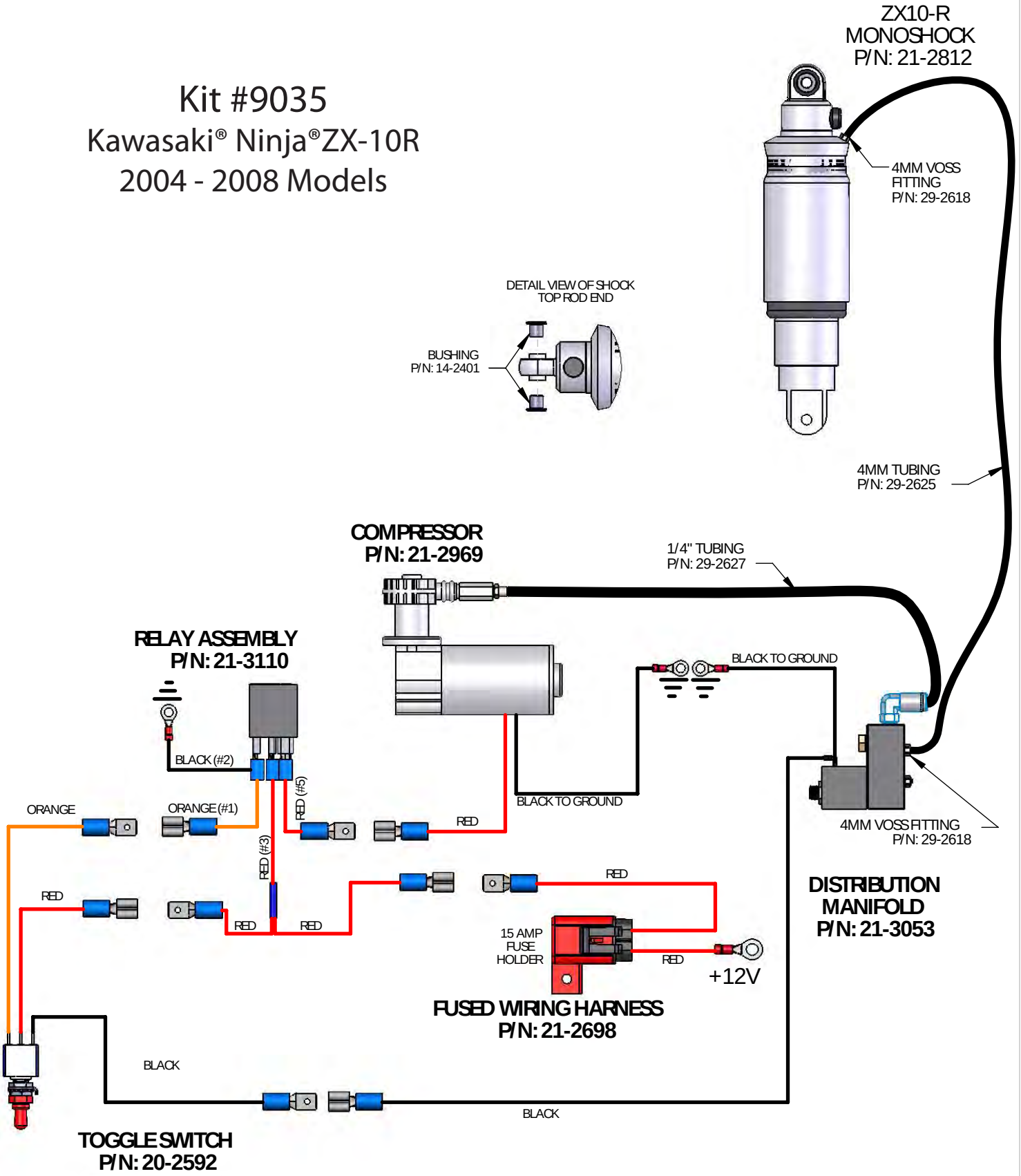

Arnott
Air Ride Systems

PROPRIETARY AND CONFIDENTIAL
THE INFORMATION CONTAINED IN THIS DRAWING IS THE SOLE PROPERTY OF ARNOTT, INC. ANY REPRODUCTION IN PART OR AS A WHOLE WITHOUT THE WRITTEN PERMISSION OF ARNOTT, INC. IS PROHIBITED.

NEXT ASSY	USED ON
APPLICATION	

DIMENSIONS ARE IN INCHES
TOLERANCES:
FRACTIONAL ±
ANGULAR: MACH ± BEND ±
TWO PLACE DECIMAL ±
THREE PLACE DECIMAL ±

MATERIAL

FINISH

DO NOT SCALE DRAWING

	NAME	DATE
DRAWN	KMD	08/05/08
CHECKED		
ENG APPR.		
MFG APPR.		
Q.A.		

COMMENTS:

9035 SCHEMATIC

SIZE	DWG. NO.	REV.
A	35-2967	0

SCALE: NONE WEIGHT: SHEET 1 OF 1

THANK YOU!

Thank you for purchasing the Arnott Cycle Air System! This system provides you with the ability to maintain your bike at a constant level regardless of load, resulting in enhanced vehicle ride, handling, and performance.

Proper installation is essential to experience and appreciate the benefits of this system. Please take a moment to review these installation instructions before you begin to install this system on your bike. Reviewing the components and the parts list below will familiarize you with the system.

It is equally important to be aware of and take all necessary safety measures while installing your new Air Ride System. This includes proper lifting and immobilizing of the bike, and isolation of any stored energy to prevent personal injury or property damage.

SAFETY WARNING:

Do not inflate the air spring assembly unless it is supported on both ends by the vehicle frame and suspension system, or by another adequate means. Doing so may result in serious injury and damage to the air spring assembly and surrounding environment.

The maximum recommended inflation pressure of the air spring is 100 psi. Over-inflation of the air spring, as well as improper use or installation of the assembly, may result in serious injury and damage to the air spring assembly and the surrounding environment.

Take precautions not to exceed the Gross Vehicle Weight Rating (GVWR, or the maximum load) recommended by the manufacturer. The air springs are rated for a maximum pressure of 100 psi. This pressure may, however, allow too great a load to be carried on most vehicles. For best results, load the vehicle and have it weighed, then compare the vehicle weight with the maximum allowed. Consult your recommended load. It is important that all vehicle's Owner Manual recommendations are followed for your own safety and to prevent damage to the vehicle. Air Springs DO NOT increase the GVWR set by the manufacturer.

WARNING

NEVER MAKE ADJUSTMENTS TO THE AIR RIDE SYSTEM WHILE THE VEHICLE IS IN MOTION. ADJUSTING THE AIR SUSPENSION WHILE VEHICLE IS IN MOTION CAN AFFECT THE STABILITY AND HANDLING, WHICH COULD RESULT IN DEATH OR SERIOUS INJURY.

(A.) PREPARING THE BIKE:

On a solid level surface, position the bike on a motorcycle lift and use all the recommended safety techniques. Lift the bike so the rear wheel is just slightly off the ground. Be sure to refer to the Owner's Manual for the bike and the motorcycle lift for all correct lifting instructions. It is also recommended that you protect any chrome or painted surfaces that may be damaged during lifting or installation procedure.

REMOVE THE SEAT BEFORE STARTING THE INSTALLATION

(B.) REMOVING THE FACTORY SHOCK:

1. Remove the lower cover panels.

2. Lift the rear suspension and loosen and remove the lower shock bolt.

3. Loosen and remove the upper shock bolt.

4. Remove the factory shock though the top side of the swing arm.

(C.) INSTALLING THE REAR AIR SHOCK:

1. Carefully place the rear air shock in the rear suspension shock mounts. Make sure the upper shock eyelet is properly aligned with the upper shock mounts.

2. Apply 2-3 drops of Loctite® 242 (Blue), to the threads of all shock mounting hardware prior to final installation.

3. Reinstall the upper OEM shock bolt. Make sure the bolt reducers are in place before inserting the upper bolt. Make sure the damper knob and air inlet hole are directed to the rear of the bike. Torque upper bolt to 25 ft-lbs (34 Nm).

4. Install the link hardware and lower shock bolt. Reverse the order in which they were removed. You may find it necessary to lower or raise the suspension to line up the suspension link and shock bolt mounting holes. Torque lower bolt to 25 ft-lbs (34 Nm).

(D.) INSTALLING THE INFLATION SYSTEM:

Split loom is provided to cover the air hose as well as protect and hide any exposed wiring.

1. Disconnect the battery, negative (-) cable first.

2. Find a suitable location to mount the on board compressor. Wherever the compressor is located be sure that it does not interfere with normal operation of the motorcycle and it is securely mounted, velcro and a bracket are included.

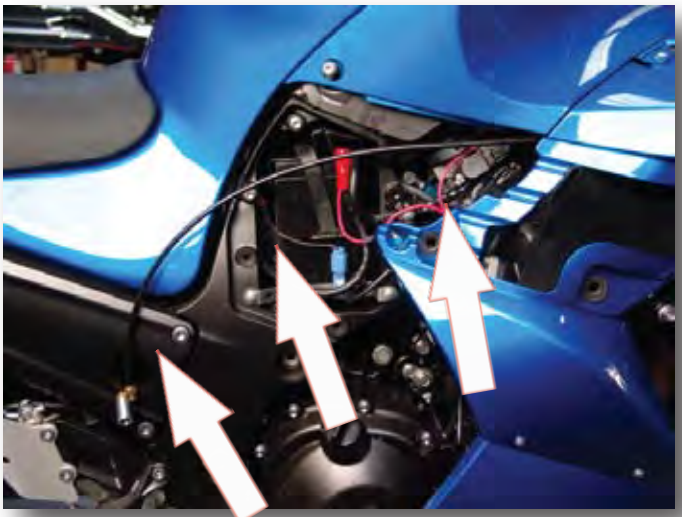

3. Route the ¼" line from the compressor to the shock absorber. There is no specific routing, use your judgement and avoid a path that could cause a kink in the air line.

4. Cut the 4mm line to the appropriate length and attach the 4mm VOSS® fitting to the line. Fitting assembly instructions are included in the kit.
NOTE: The VOSS® fittings seal with O-Rings, do not overtighten!

NOTE: A system schematic is included for reference.

5. Find a suitable location to mount the toggle switch. There are a number of locations the can be utilized to mount the toggle switch. Ultimately the location of the switch is up to the installer. Also included with the kit is a relay assembly, refer to the schematic for a wiring diagram.

6. Find a location for the fuse assembly near the battery. Connect the ring terminal of the fuse assembly to the battery positive (+) terminal.

7. Reconnect the battery cables and torque to 60-96 in-lbs (6.8-10.9 Nm). Power up the system and check for leaks using a soap and water solution.

8. Reinstall any bodywork removed previously and reattach the seat. Check for adequate clearance between the rear tire and fender.

NOTE: A system schematic is included for reference.

WARNING

ALWAYS SECURE YOUR MOTORCYCLE IN A WHEEL CHOCK WHEN UNATTENDED, OR SHORTEN THE SIDE STAND, AS IN THE EVENT OF FAILURE THE BIKE COULD FALL OVER.

Thank you for purchasing an Arnott Air Ride Suspension Product!

Each owner or installer is unique, therefore installation of this system can be done many different ways. The mounting locations of the compressor and inflation switch are suggestions by our engineers. If proper wiring guidelines and instructions are followed, relocation of the compressor or switch will neither affect the system operation nor void your warranty.

Adjust air spring pressure as required for desired ride quality to maximize the benefits of your system. Excess pressure will result in a firmer ride, too little pressure will allow the suspension to bottom out.

WARNING

DO NOT ADJUST THE AIR RIDE SYSTEM WHILE THE BIKE IS IN MOTION, DOING SO CAN AFFECT STABILITY AND HANDLING, THIS COULD RESULT IN DEATH OR SERIOUS INJURY.

DISCLAIMER

The terms Kawasaki®and ZX10-R®, are used for reference only. Arnott Air Suspension products are in no way authorized by nor associated with the aforementioned manufacturer. All references to Kawasaki® terms and models are for reference and identification purposes only.

The use and installation of any Arnott Air Suspension product or kit may adversely affect or void your factory warranty. It is the responsibility of the motorcycle owner to check federal, state and local laws and ordinances before modifying or customizing his or her motorcycle. It is the exclusive and total responsibility of the motorcycle owner to determine the suitability of this product for his or her use. The user shall assume all legal obligations, personal injury risk and all liability duties and risk associated with the use of this product. Arnott Air Suspension products are designed and intended for the experienced off-road motorcyclists only and intended for closed course operation.

Arnott Air Suspension products and kits are designed exclusively for OEM manufactured and equipped motorcycles with no modifications. Any installation of aftermarket or customized components may adversely affect the operation and performance of Arnott Air suspension kits and components and may void the manufacturers warranty. These directions are accurate at time of publication. Arnott Inc. reserves the right to revise specifications without notice.